ADJUSTMENT

HINT:

- Before adjusting the door position for vehicles equipped with side airbags and curtain shield airbags, be sure to disconnect the battery negative (-) cable. After adjustment, inspect the SRS warning light, the side airbag system and the curtain shield airbag system for normal operation (See page RS-26).
- Use the same procedures for the RH side and LH side.
- The procedures listed below are for the LH side.

1. INSPECT FRONT DOOR PANEL SUB-ASSEMBLY LH

(a) Check that the clearance measurements of areas A to C are within the standard range.

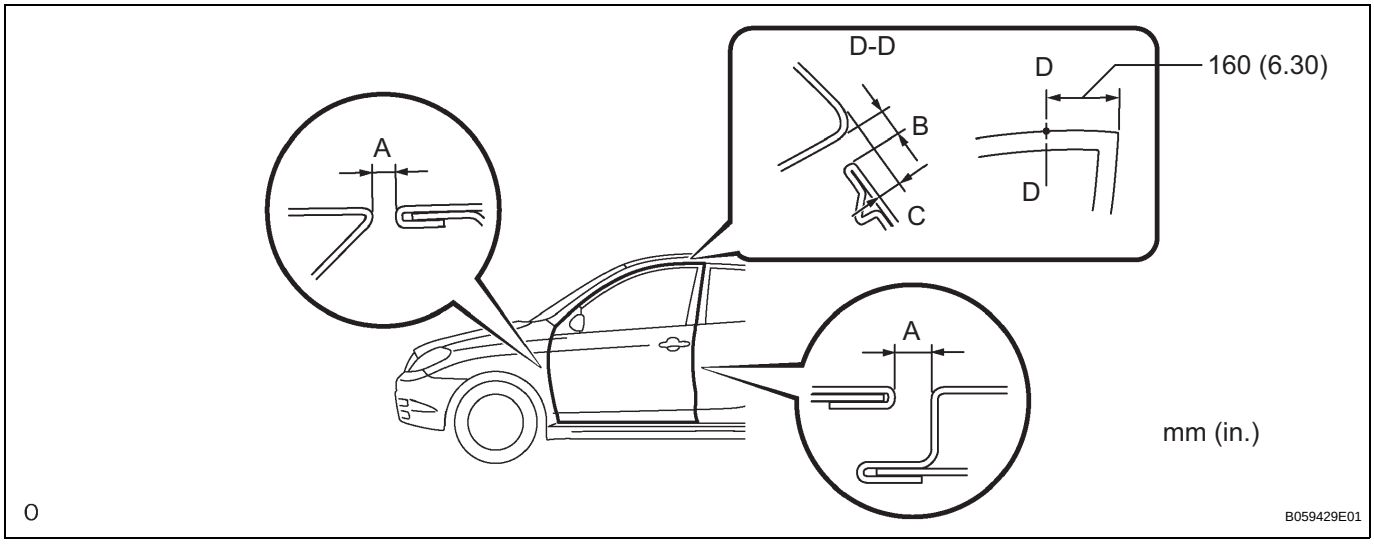

Standard clearance

Area	Measurement
A	3.5 to 6.5 mm (0.138 to 0.256 in.)
B	4.0 to 7.0 mm (0.158 to 0.276 in.)
C	4.5 to 7.5 mm (0.177 to 0.295 in.)

NOTICE:
D: 160 mm (6.30 in.) from the end of the window frame, check the clearances B and C as illustrated in the cross section.

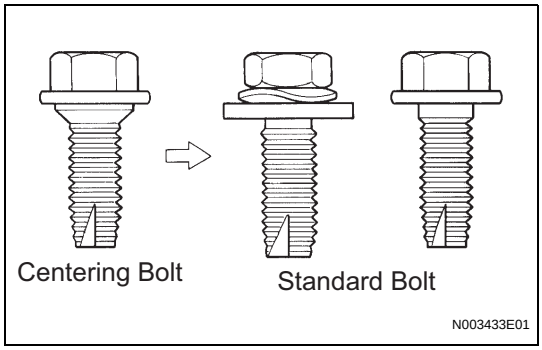

2. REMOVE BOLT

(a) Remove the bolt.

HINT:

- Centering bolts are used to mount the door hinge to the vehicle body and door. The door cannot be adjusted with the centering bolts on. Substitute the centering bolts with standard bolts (with washers) when making adjustments.
- A bolt without a torque specification is shown in the standard bolt chart (See page IP-5).

3. ADJUST FRONT DOOR PANEL SUB-ASSEMBLY LH

(a) Turn the ignition switch OFF.

(b) Disconnect the negative (-) terminal cable from the battery.
CAUTION:
Work must be started at least 90 seconds after the ignition switch is turned OFF and the negative (-) terminal cable is disconnected from the battery. (The SRS is equipped with a back-up power source. If work is started within 90 seconds of disconnecting the negative (-) terminal battery and turning the ignition switch OFF, the SRS may deploy.)

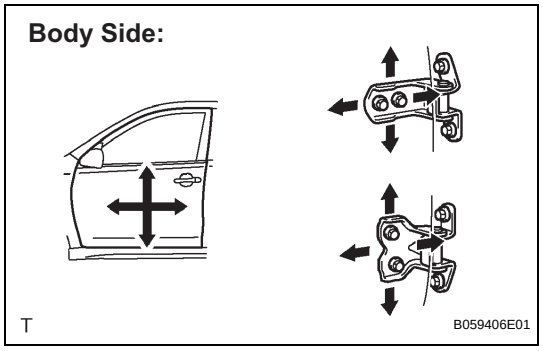

(c) Using SST, loosen the body side's hinge bolts and adjust the door's position.
SST 09812-00010
(d) Tighten the body side's hinge bolts after the adjustment.
Torque: 26 N*m (265 kgf*cm, 19 ft.*lbf)

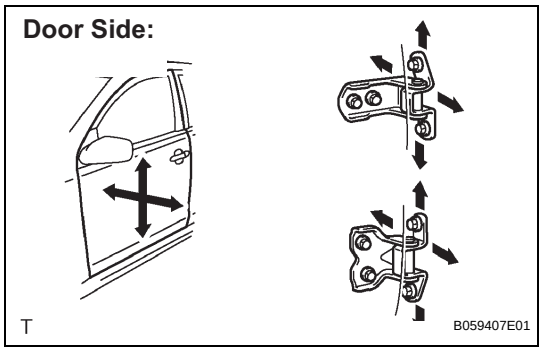

(e) Loosen the door side's hinge bolts and adjust the door's position.
(f) Tighten the door side's hinge bolts after the adjustment.
Torque: 26 N*m (265 kgf*cm, 19 ft.*lbf)

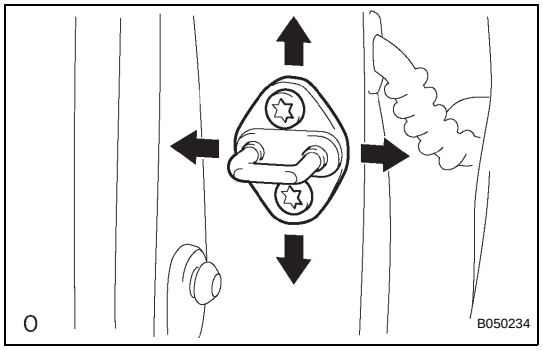

(g) Adjust the striker position by slightly loosening the striker mounting screws, and hitting the striker with a plastic-faced hammer.
(h) Tighten the striker mounting screws after the adjustment.
(i) Connect the battery negative (-) cable.
(j) Inspect the SRS warning light (See page RS-26).

REASSEMBLY

1. INSTALL FRONT DOOR WEATHERSTRIP LH

(a) Install the weatherstrip.

(b) Apply adhesive to the threads of the bolt.
Adhesive:
Part No. 08833-00070, THREE BOND 1324 or equivalent

(c) Install the check to the body panel with the bolt.
Torque: 30 N*m (306 kgf*cm, 22 in.*lbf)

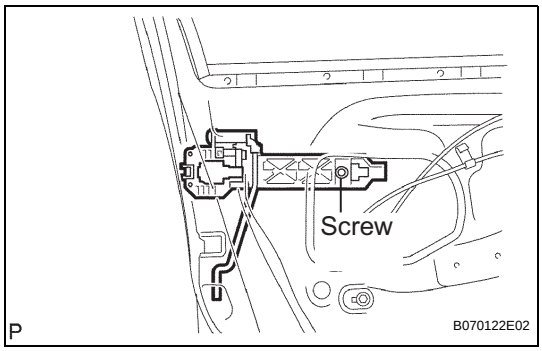

2. INSTALL FRONT DOOR OUTSIDE HANDLE FRAME SUB-ASSEMBLY LH

(a) Install the lock open rod.

(b) Apply MP grease to the sliding areas of the frame.

(c) Using a "torx" wrench (T30), install the outside handle.
Torque: 4.0 N*m (41 kgf*cm, 35 in.*lbf)

3. INSTALL FRONT DOOR LOCK ASSEMBLY LH (w/o Power Door Lock)

(a) Install a new door lock wire harness packing.

(b) Apply MP grease to the sliding and rotating areas of the door lock.

(c) Apply adhesive to the 3 screws.
Adhesive:
Part No. 08833-00070, THREE BOND 1324 or equivalent

(d) Using a "torx" wrench (T30), install the door lock with the 3 screws.
Torque: 5.0 N*m (51 kgf*cm, 44 in.*lbf)

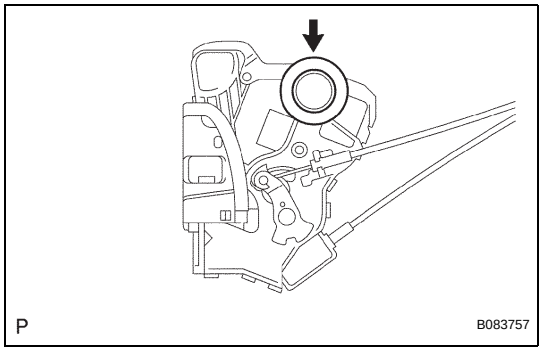

4. INSTALL FRONT DOOR LOCK ASSEMBLY LH (w/ Power Door Lock)

(a) Apply MP grease to the sliding and rotating areas of the door lock.

(b) Install a new door lock wire harness packing.
NOTICE:
- **When reinstalling a door lock, always use new packing.**
- **Do not allow grease or dirt to contaminate the gap between the door panel and packing.**
- **Old packing or damaged packing cannot effectively protect against water. Water will damage the door lock.**

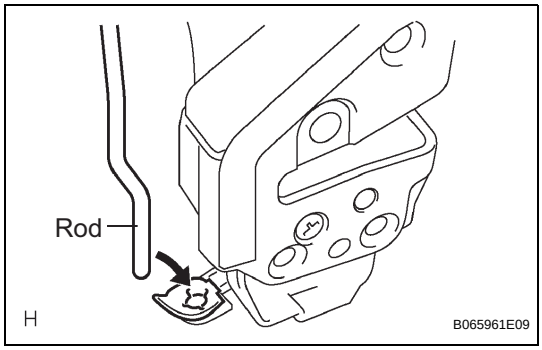

(c) Insert the control rod into the door lock, and then set it to the door panel.
NOTICE:
Make sure that the rod is securely engaged with the lock.

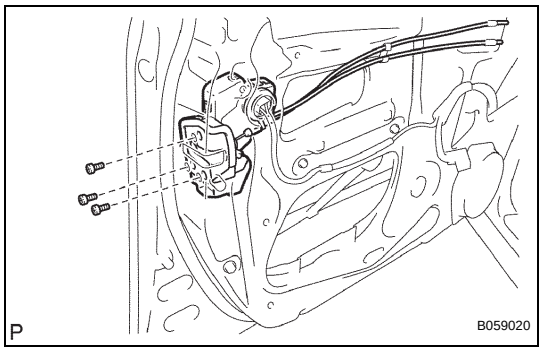

(d) Apply adhesive to the threads of the 3 screws.
Adhesive:
Part No. 08833-00070, THREE BOND 1324 or equivalent

(e) Using a "torx" wrench (T30), install the door lock with the 3 screws.
Torque: 5.0 N*m (51 kgf*cm, 44 in.*lbf)

(f) Connect the power door lock connector.

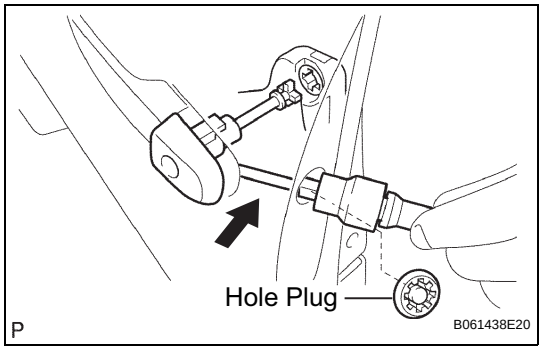

5. INSTALL FRONT DOOR OUTSIDE HANDLE COVER LH

(a) Using a "torx" wrench (T30), install the cover (with the door lock key cylinder installed) with the screw.
Torque: 4.0 N*m (41 kgf*cm, 35 in.*lbf)

(b) Install the hole plug.

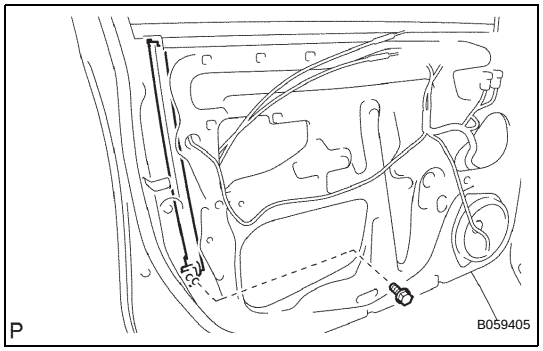

6. INSTALL FRONT DOOR FRAME SUB-ASSEMBLY REAR LOWER LH

(a) Install the frame with the bolt.
Torque: 6.2 N*m (63 kgf*cm, 55 in.*lbf)

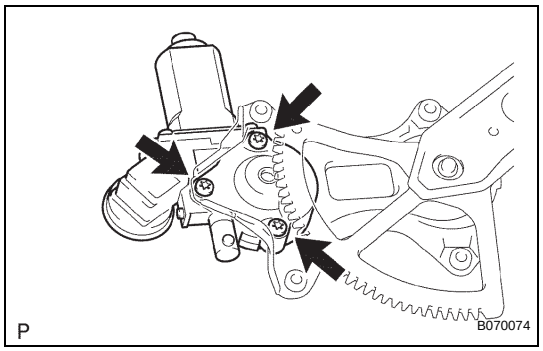

7. INSTALL POWER WINDOW REGULATOR MOTOR ASSEMBLY LH (w/ Power Window)

(a) Align the matchmarks on the regulator motor bracket and regulator gear.

(b) Install the motor with the 3 screws.
Torque: 5.4 N*m (55 kgf*cm, 48 in.*lbf)
HINT:
Never rotate the motor down word until the window glass installation is completed.

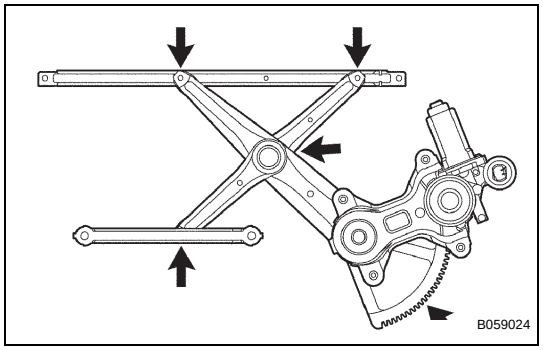

8. INSTALL FRONT DOOR WINDOW REGULATOR SUB-ASSEMBLY LH (w/ Power Window)

(a) Apply MP grease to the sliding and rotating areas of the window regulator.
NOTICE:
Do not apply grease to the spring of the window regulator.

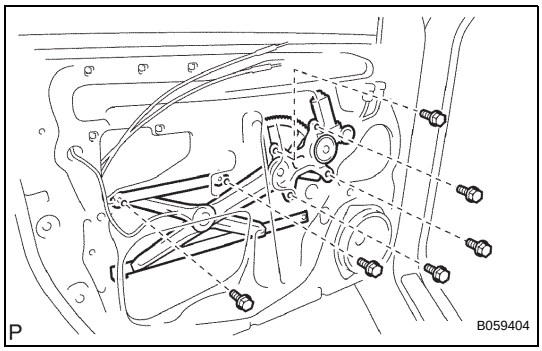

(b) Install the regulator with the 6 bolts.
Torque: 8.0 N*m (82 kgf*cm, 71 in.*lbf)
(c) Connect the window regulator connector.

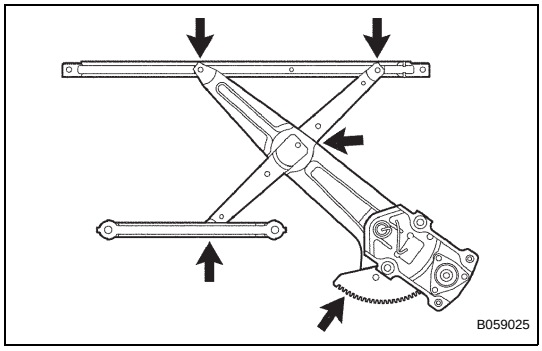

9. INSTALL FRONT DOOR WINDOW REGULATOR SUB-ASSEMBLY LH (w/o Power Window)
(a) Apply MP grease to the sliding and rotating parts of the window regulator.
NOTICE:
Do not apply grease to the spring of the window regulator.
(b) Install the window regulator with the 5 bolts.
Torque: 8.0 N*m (82 kgf*cm, 71 in.*lbf)

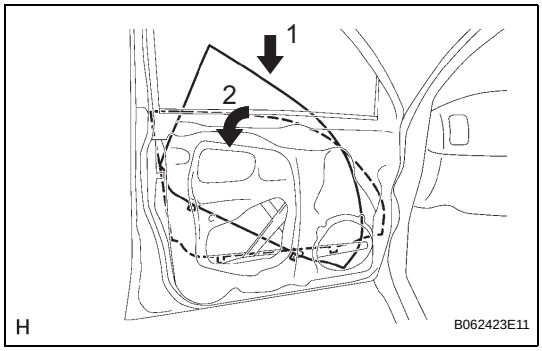

10. INSTALL FRONT DOOR GLASS SUB-ASSEMBLY LH (w/ Power Window)
(a) Install the glass run.
NOTICE:
Do not damage the door glass.
(b) Insert the door glass into the door panel along the glass run as indicated in the illustration.

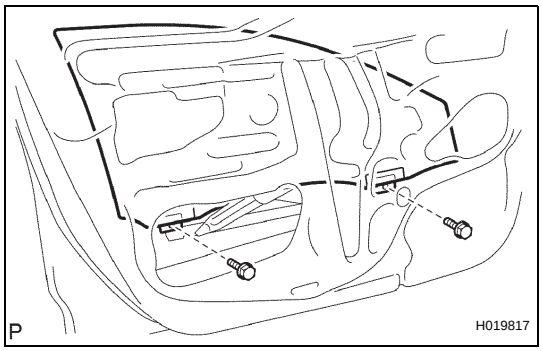

(c) Install the door glass to the window regulator with the 2 bolts.
Torque: 8.0 N*m (82 kgf*cm, 71 in.*lbf)

11. INSPECT POWER WINDOW FUNCTION (w/ Power Window)
(a) Inspect power window function (See page WS-3).

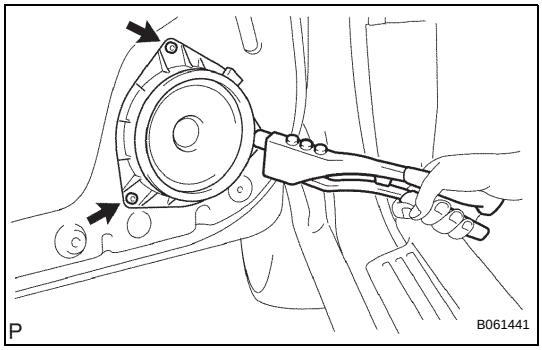

12. INSTALL FRONT NO. 1 SPEAKER ASSEMBLY
(a) Install the front No. 1 speaker to the door.

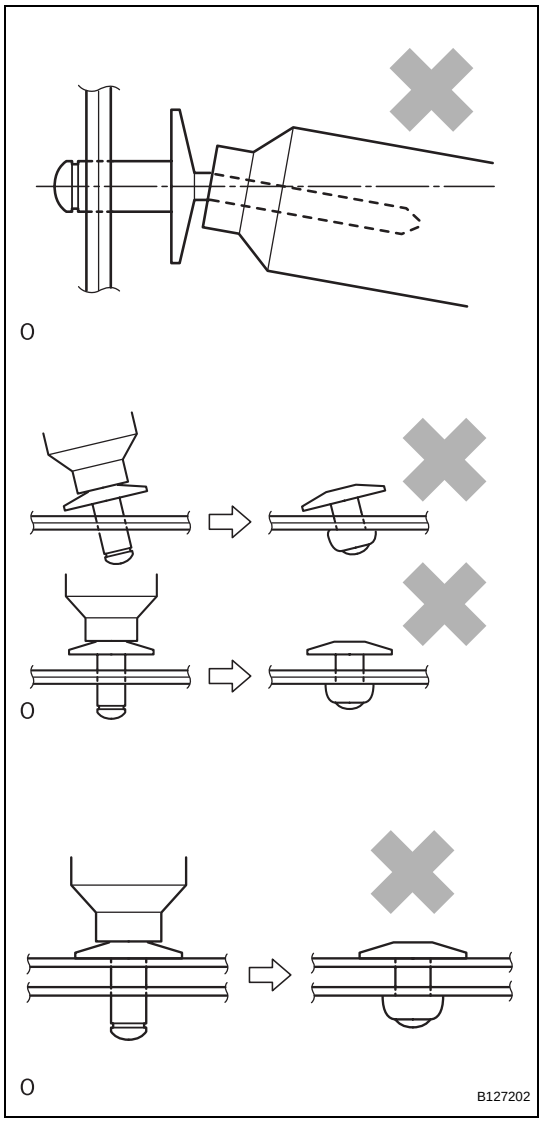

(b) Using a hand riveter or an air riveter, install the speaker to the door with the 3 rivets.
NOTICE:
- **Do not prize the riveter. The riveter will be damaged and the mandrel will bend.**
- **Do not tilt the riveter when fastening the rivet to the speaker as this will cause the rivet to be loose.**
- **Do not have any space between the rivet head and the speaker. The rivet head must be completely flat against the speaker.**
- **Do not have any space between the speaker and door. Firmly hold together the 2 items while installing the rivet.**

(c) Connect the speaker connector.

13. INSTALL OUTER REAR VIEW MIRROR ASSEMBLY LH

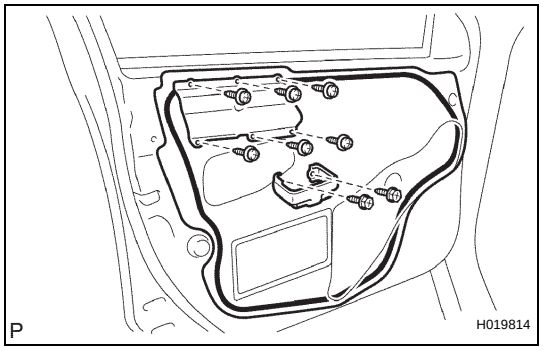

14. INSTALL FRONT DOOR SERVICE HOLE COVER LH

(a) Install the reinforcement with the 6 screws.

(b) Install a new service hole cover to the door panel.
HINT:
- When installing the service hole cover, pull out the links and connectors through the service hole cover.
- There should be no wrinkles or folds after attaching the service hole cover.
- After attaching the service hole cover, sealing condition should be confirmed.

(c) Install the bracket with the 2 screws.

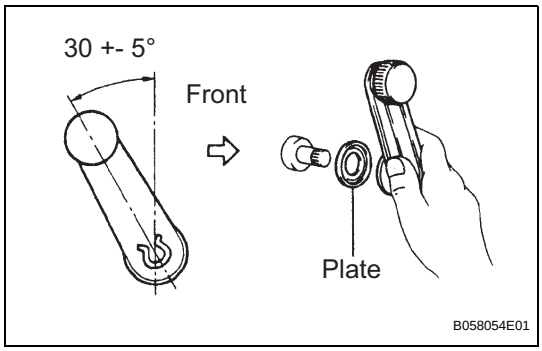

15. INSTALL FRONT DOOR WINDOW REGULATOR HANDLE ASSEMBLY (w/o Power Window)

(a) Install the regulator handle with the snap ring.
HINT:
With the door window fully closed, install the plate and regulator handle with the snap ring as shown in the illustration.